TECHNICAL DATASHEET

90° tee

PN10 **SDR17**

PRODUCT DETAILS

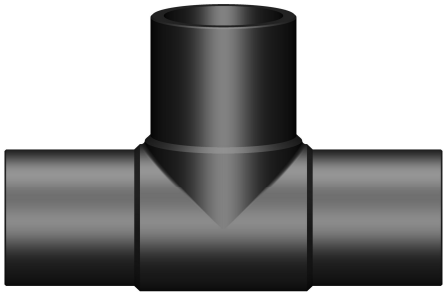

DIMENSIONS AND WEIGHT

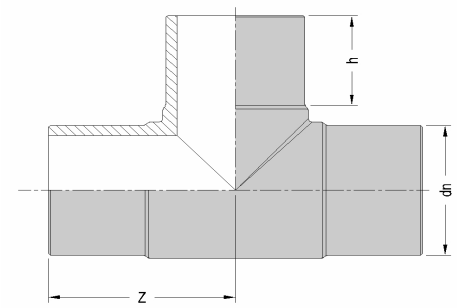

ITEM	**2020100090**
dn [mm]	90
dn1 [mm]	
SDR	17
PN	10
MATERIAL	PE100
TRADEMARK	EURO
MANUFACTURING TYPE	INJECTION MOULDED
USE	WATER-GAS
QUANTITY PER BOX	10

NOTE:

dn	[mm]	90
h	[mm]	80
Z	[mm]	140

WEIGHT	[g]	580

Tolerance: +/- 5% excluding dn

MARKING AND LABEL on fitting

PE100 d90 PN10 SDR17

STANDARDS AND APPROVALS

EN 12201
EN 1555
ISO 15494
DVGW

INFOS

- Moulded in PE 100 with long collar

All dimensions are in millimeters and are intended as nominal and standard sizes: weights are in grams.
EUROSTANDARD reserves the right to change geometries and dimensions of any product.

TECHNICAL DATASHEET

90° tee

PN10 **SDR17**

PRODUCT DETAILS

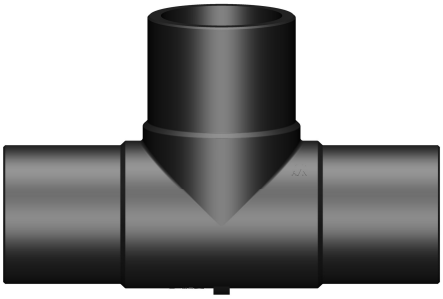

DIMENSIONS AND WEIGHT

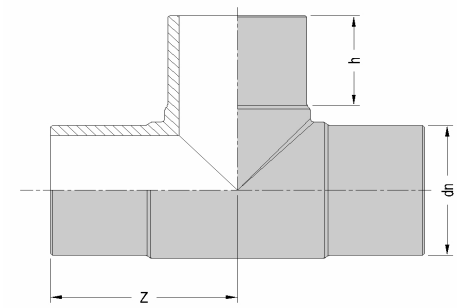

ITEM	**2020100110**
dn [mm]	110
dn1 [mm]	
SDR	17
PN	10
MATERIAL	PE100
TRADEMARK	EURO
MANUFACTURING TYPE	INJECTION MOULDED
USE	WATER-GAS
QUANTITY PER BOX	9

NOTE:

dn	[mm]	110
h	[mm]	87
Z	[mm]	162

WEIGHT	[g]	975

Tolerance: +/- 5% excluding dn

MARKING AND LABEL on fitting

PE100 d110 PN10 SDR17

STANDARDS AND APPROVALS

EN 12201
EN 1555
ISO 15494
DVGW

INFOS

- Moulded in PE 100 with long collar

All dimensions are in millimeters and are intended as nominal and standard sizes: weights are in grams.
EUROSTANDARD reserves the right to change geometries and dimensions of any product.

TECHNICAL DATASHEET

90° tee

PN10 **SDR17**

PRODUCT DETAILS

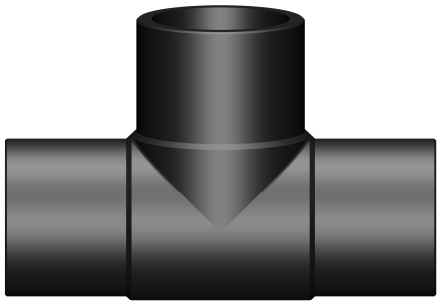

DIMENSIONS AND WEIGHT

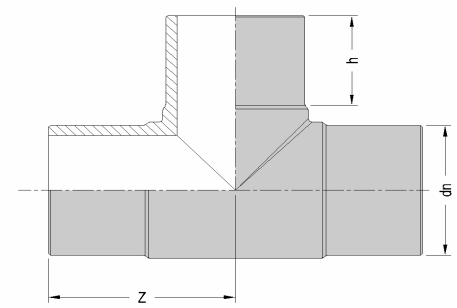

ITEM	**2020100125**
dn [mm]	125
dn1 [mm]	
SDR	17
PN	10
MATERIAL	PE100
TRADEMARK	EURO
MANUFACTURING TYPE	INJECTION MOULDED
USE	WATER-GAS
QUANTITY PER BOX	1

NOTE:

dn	[mm]	125
h	[mm]	88
Z	[mm]	186

WEIGHT	[g]	1540

Tolerance: +/- 5% excluding dn

MARKING AND LABEL on fitting

PE100 d125 SDR17 PN10

STANDARDS AND APPROVALS

EN 12201
EN 1555
ISO 15494
DVGW

INFOS

- Moulded in PE 100 with long collar

All dimensions are in millimeters and are intended as nominal and standard sizes: weights are in grams.
EUROSTANDARD reserves the right to change geometries and dimensions of any product.

TECHNICAL DATASHEET

90° tee

PN10 **SDR17**

PRODUCT DETAILS

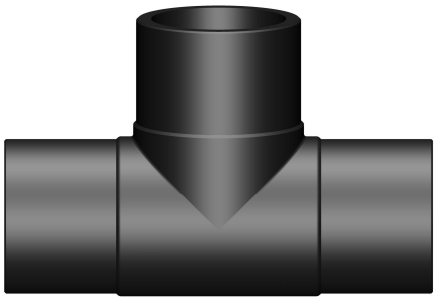

DIMENSIONS AND WEIGHT

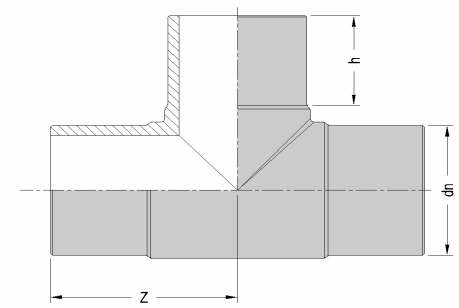

ITEM	**2020100140**
dn [mm]	140
dn1 [mm]	
SDR	17
PN	10
MATERIAL	PE100
TRADEMARK	EURO
MANUFACTURING TYPE	INJECTION MOULDED
USE	WATER-GAS
QUANTITY PER BOX	1

NOTE:

dn	[mm]	140
h	[mm]	94
Z	[mm]	181

WEIGHT	[g]	1790

Tolerance: +/- 5% excluding dn

MARKING AND LABEL on fitting

PE100 d140 SDR17 PN10

STANDARDS AND APPROVALS

EN 12201
EN 1555
ISO 15494
DVGW

INFOS

- Moulded in PE 100 with long collar

All dimensions are in millimeters and are intended as nominal and standard sizes: weights are in grams.
EUROSTANDARD reserves the right to change geometries and dimensions of any product.

TECHNICAL DATASHEET

90° tee

PN10 **SDR17**

PRODUCT DETAILS

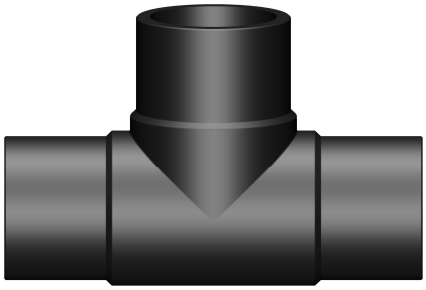

DIMENSIONS AND WEIGHT

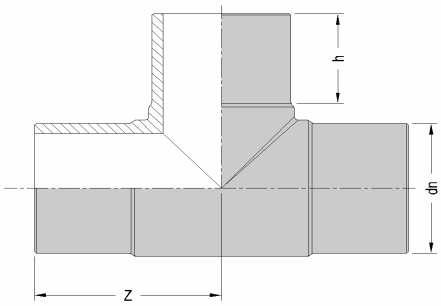

ITEM	**2020100160**
dn [mm]	160
dn1 [mm]	
SDR	17
PN	10
MATERIAL	PE100
TRADEMARK	EURO
MANUFACTURING TYPE	INJECTION MOULDED
USE	WATER-GAS
QUANTITY PER BOX	1

NOTE:

dn	[mm]	160
h	[mm]	106
Z	[mm]	216

WEIGHT	[g]	3030

Tolerance: +/- 5% excluding dn

MARKING AND LABEL on fitting

PE100 d160 PN10 SDR17

STANDARDS AND APPROVALS

EN 12201
EN 1555
ISO 15494
DVGW

INFOS

- Moulded in PE 100 with long collar

All dimensions are in millimeters and are intended as nominal and standard sizes: weights are in grams.
EUROSTANDARD reserves the right to change geometries and dimensions of any product.

TECHNICAL DATASHEET

90° tee

PN10 **SDR17**

PRODUCT DETAILS

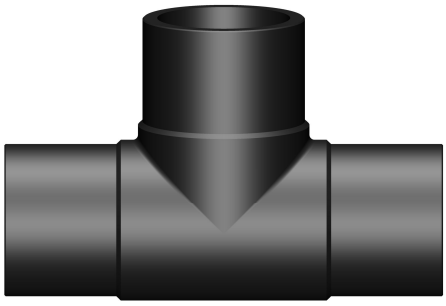

DIMENSIONS AND WEIGHT

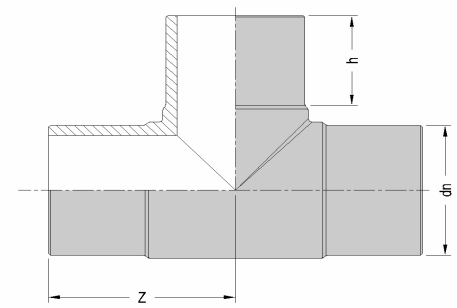

ITEM	**2020100180**
dn [mm]	180
dn1 [mm]	
SDR	17
PN	10
MATERIAL	PE100
TRADEMARK	EURO
MANUFACTURING TYPE	INJECTION MOULDED
USE	WATER-GAS
QUANTITY PER BOX	1

NOTE:

dn	[mm]	180
h	[mm]	117
Z	[mm]	241

WEIGHT	[g]	4140

Tolerance: +/- 5% excluding dn

MARKING AND LABEL on fitting

PE100 d180 PN10 SDR17

STANDARDS AND APPROVALS

EN 12201
EN 1555
ISO 15494
DVGW

INFOS

- Moulded in PE 100 with long collar

All dimensions are in millimeters and are intended as nominal and standard sizes: weights are in grams.
EUROSTANDARD reserves the right to change geometries and dimensions of any product.

TECHNICAL DATASHEET

90° tee

PN10 **SDR17**

PRODUCT DETAILS

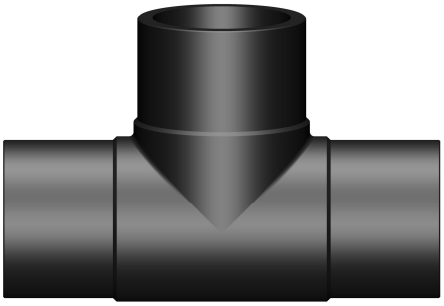

DIMENSIONS AND WEIGHT

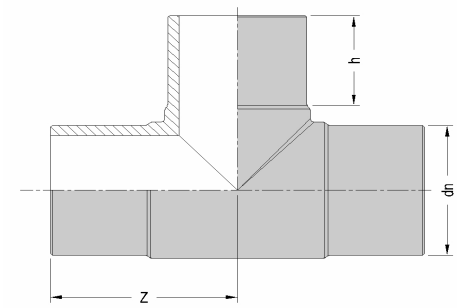

ITEM	**2020100200**
dn [mm]	200
dn1 [mm]	
SDR	17
PN	10
MATERIAL	PE100
TRADEMARK	EURO
MANUFACTURING TYPE	INJECTION MOULDED
USE	WATER-GAS
QUANTITY PER BOX	1

NOTE:

dn	[mm]	200
h	[mm]	130
Z	[mm]	259

WEIGHT	[g]	5150

Tolerance: +/- 5% excluding dn

MARKING AND LABEL on fitting

PE100 d 200 PN10 SDR17

STANDARDS AND APPROVALS

EN 12201
EN 1555
ISO 15494
DVGW

INFOS

- Moulded in PE 100 with long collar

All dimensions are in millimeters and are intended as nominal and standard sizes: weights are in grams.
EUROSTANDARD reserves the right to change geometries and dimensions of any product.

TECHNICAL DATASHEET

90° tee

PN10 **SDR17**

PRODUCT DETAILS

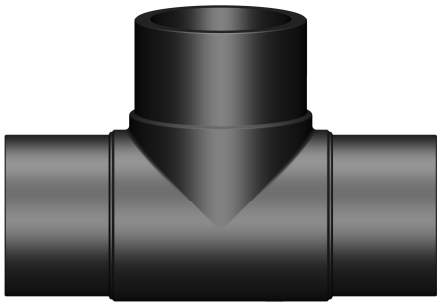

DIMENSIONS AND WEIGHT

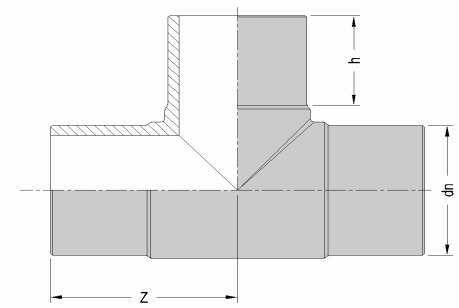

ITEM	**2020100225**
dn [mm]	225
dn1 [mm]	
SDR	17
PN	10
MATERIAL	PE100
TRADEMARK	EURO
MANUFACTURING TYPE	INJECTION MOULDED
USE	WATER-GAS
QUANTITY PER BOX	1

NOTE:

dn	[mm]	225
h	[mm]	136
Z	[mm]	282

WEIGHT	[g]	7690

Tolerance: +/- 5% excluding dn

MARKING AND LABEL on fitting

PE100 d225 SDR17 PN10

STANDARDS AND APPROVALS

EN 12201
EN 1555
ISO 15494
DVGW

INFOS

- Moulded in PE 100 with long collar

All dimensions are in millimeters and are intended as nominal and standard sizes: weights are in grams.
EUROSTANDARD reserves the right to change geometries and dimensions of any product.

TECHNICAL DATASHEET

90° tee

PN10 **SDR17**

PRODUCT DETAILS

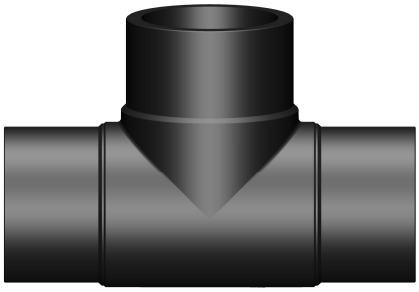

DIMENSIONS AND WEIGHT

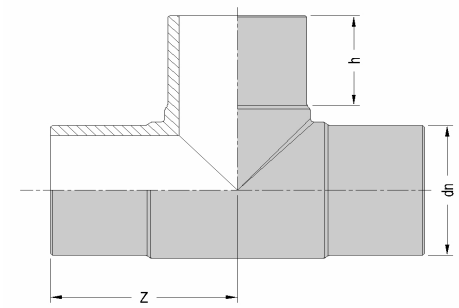

ITEM	**2020100250**
dn [mm]	250
dn1 [mm]	
SDR	17
PN	10
MATERIAL	PE100
TRADEMARK	EURO
MANUFACTURING TYPE	INJECTION MOULDED
USE	WATER-GAS
QUANTITY PER BOX	1

NOTE:

dn	[mm]	250
h	[mm]	135
Z	[mm]	304

WEIGHT	[g]	13310

Tolerance: +/- 5% excluding dn

MARKING AND LABEL on fitting

PE100 d250 SDR17 PN10

STANDARDS AND APPROVALS

EN 12201
EN 1555
ISO 15494
DVGW

INFOS

- Moulded in PE 100 with long collar

All dimensions are in millimeters and are intended as nominal and standard sizes: weights are in grams.
EUROSTANDARD reserves the right to change geometries and dimensions of any product.

TECHNICAL DATASHEET

90° tee

PN10 **SDR17**

PRODUCT DETAILS

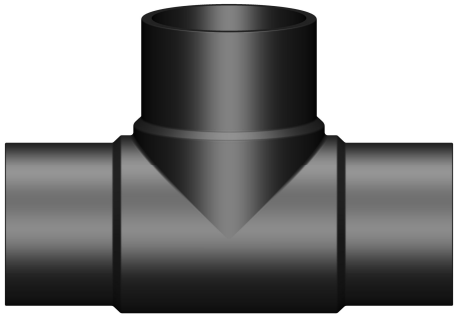

DIMENSIONS AND WEIGHT

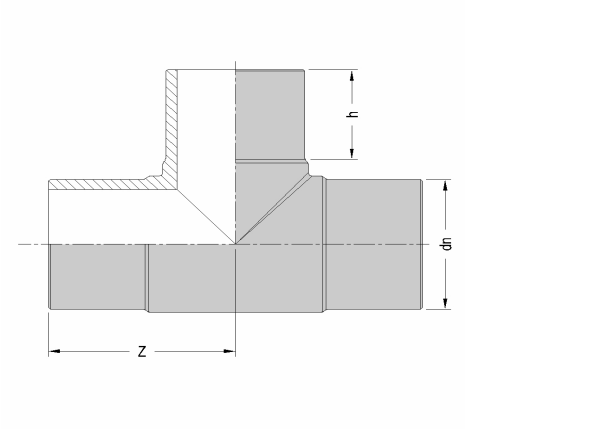

ITEM	**2020100280**
dn [mm]	280
dn1 [mm]	
SDR	17
PN	10
MATERIAL	PE100
TRADEMARK	EURO
MANUFACTURING TYPE	INJECTION MOULDED
USE	WATER-GAS
QUANTITY PER BOX	1

NOTE:

dn	[mm]	280
h	[mm]	170
Z	[mm]	355

WEIGHT	[g]	16510

Tolerance: +/- 5% excluding dn

MARKING AND LABEL on fitting

PE100 d280 SDR17 PN10

STANDARDS AND APPROVALS

EN 12201
EN 1555
ISO 15494
DVGW

INFOS

- Moulded in PE 100 with long collar

All dimensions are in millimeters and are intended as nominal and standard sizes: weights are in grams.
EUROSTANDARD reserves the right to change geometries and dimensions of any product.

TECHNICAL DATASHEET

90° tee

PN10 **SDR17**

PRODUCT DETAILS

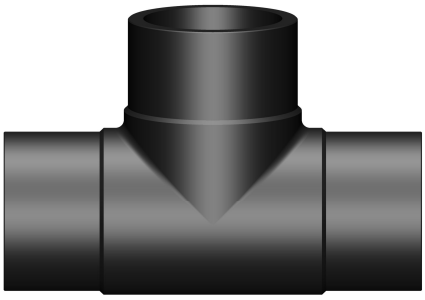

DIMENSIONS AND WEIGHT

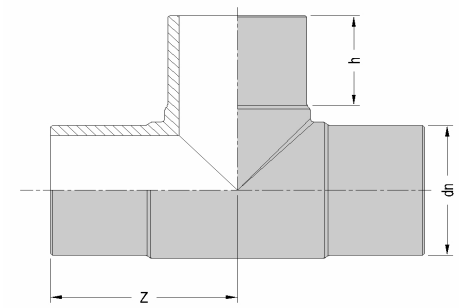

ITEM	**2020100315**
dn [mm]	315
dn1 [mm]	
SDR	17
PN	10
MATERIAL	PE100
TRADEMARK	EURO
MANUFACTURING TYPE	INJECTION MOULDED
USE	WATER-GAS
QUANTITY PER BOX	1

NOTE:

dn	[mm]	315
h	[mm]	174
Z	[mm]	388

WEIGHT	[g]	22690

Tolerance: +/- 5% excluding dn

MARKING AND LABEL on fitting

PE100 d315 SDR17 PN10

STANDARDS AND APPROVALS

EN 12201
EN 1555
ISO 15494
DVGW

INFOS

- Moulded in PE 100 with long collar

All dimensions are in millimeters and are intended as nominal and standard sizes: weights are in grams.
EUROSTANDARD reserves the right to change geometries and dimensions of any product.