TECHNICAL DATASHEET

45° elbow

PN10 **SDR17**

PRODUCT DETAILS

DIMENSIONS AND WEIGHT

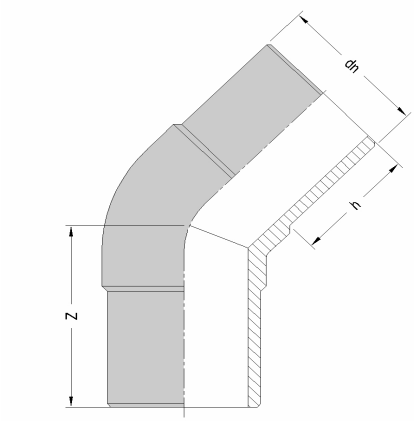

ITEM	**2015100090**
dn [mm]	90
dn1 [mm]	
SDR	17
PN	10
MATERIAL	PE100
TRADEMARK	EURO
MANUFACTURING TYPE	INJECTION MOULDED
USE	WATER-GAS
QUANTITY PER BOX	7

NOTE:

dn	[mm]	90
h	[mm]	83
Z	[mm]	106

WEIGHT	[g]	350

Tolerance: +/- 5% excluding dn

MARKING AND LABEL on fitting

PE100 d90 PN10 SDR17

STANDARDS AND APPROVALS

EN 12201
EN 1555
ISO 15494
DVGW

INFOS

- Moulded in PE 100 with long collar

All dimensions are in millimeters and are intended as nominal and standard sizes: weights are in grams.
EUROSTANDARD reserves the right to change geometries and dimensions of any product.

TECHNICAL DATASHEET

45° elbow

PN10 **SDR17**

PRODUCT DETAILS

ITEM	**2015100110**
dn [mm]	110
dn1 [mm]	
SDR	17
PN	10
MATERIAL	PE100
TRADEMARK	EURO
MANUFACTURING TYPE	INJECTION MOULDED
USE	WATER-GAS
QUANTITY PER BOX	8

NOTE:

DIMENSIONS AND WEIGHT

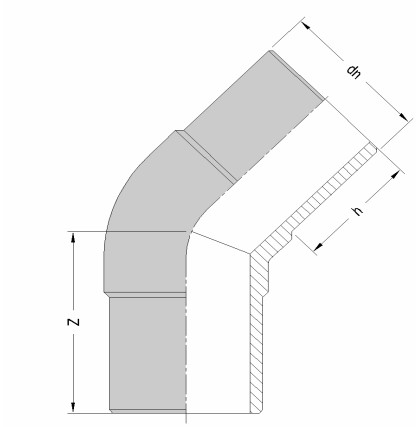

dn	[mm]	110
h	[mm]	84
Z	[mm]	112

WEIGHT	[g]	495

Tolerance: +/- 5% excluding dn

MARKING AND LABEL on fitting

PE100 d110 PN10 SDR17

STANDARDS AND APPROVALS

EN 12201
EN 1555
ISO 15494
DVGW

INFOS

- Moulded in PE 100 with long collar

All dimensions are in millimeters and are intended as nominal and standard sizes: weights are in grams.
EUROSTANDARD reserves the right to change geometries and dimensions of any product.

TECHNICAL DATASHEET

45° elbow

PN10 **SDR17**

PRODUCT DETAILS

ITEM	**2015100125**
dn [mm]	125
dn1 [mm]	
SDR	17
PN	10
MATERIAL	PE100
TRADEMARK	EURO
MANUFACTURING TYPE	INJECTION MOULDED
USE	WATER-GAS
QUANTITY PER BOX	1

NOTE:

DIMENSIONS AND WEIGHT

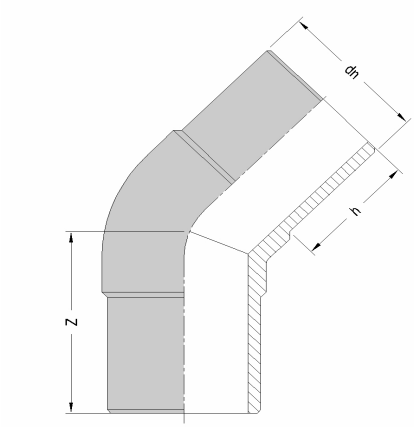

dn	[mm]	125
h	[mm]	89
Z	[mm]	125

WEIGHT	[g]	740

Tolerance: +/- 5% excluding dn

MARKING AND LABEL on fitting

PE100 d125 SDR17 PN10

STANDARDS AND APPROVALS

EN 12201
EN 1555
ISO 15494
DVGW

INFOS

- Moulded in PE 100 with long collar

All dimensions are in millimeters and are intended as nominal and standard sizes: weights are in grams.
EUROSTANDARD reserves the right to change geometries and dimensions of any product.

TECHNICAL DATASHEET

45° elbow

PN10 **SDR17**

PRODUCT DETAILS

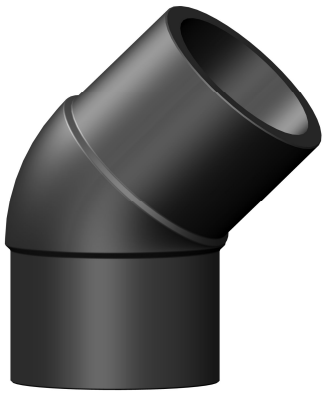

ITEM	**2015100140**
dn [mm]	140
dn1 [mm]	
SDR	17
PN	10
MATERIAL	PE100
TRADEMARK	EURO
MANUFACTURING TYPE	INJECTION MOULDED
USE	WATER-GAS
QUANTITY PER BOX	1

NOTE:

DIMENSIONS AND WEIGHT

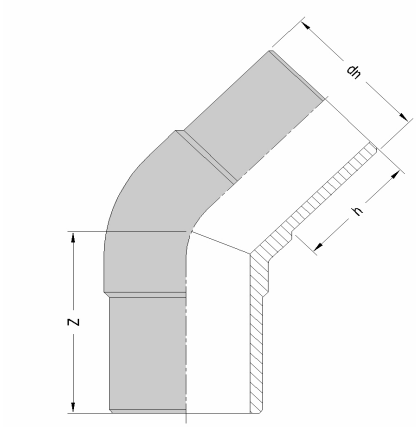

dn	[mm]	140
h	[mm]	95
Z	[mm]	128

WEIGHT	[g]	970

Tolerance: +/- 5% excluding dn

MARKING AND LABEL on fitting

PE100 d140 SDR17 PN10

STANDARDS AND APPROVALS

EN 12201
EN 1555
ISO 15494
DVGW

INFOS

- Moulded in PE 100 with long collar

All dimensions are in millimeters and are intended as nominal and standard sizes: weights are in grams.
EUROSTANDARD reserves the right to change geometries and dimensions of any product.

TECHNICAL DATASHEET

45° elbow

PN10 **SDR17**

PRODUCT DETAILS

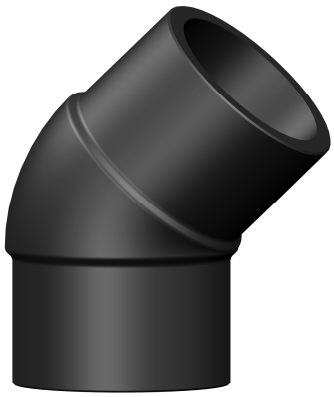

ITEM	**2015100160**
dn [mm]	160
dn1 [mm]	
SDR	17
PN	10
MATERIAL	PE100
TRADEMARK	EURO
MANUFACTURING TYPE	INJECTION MOULDED
USE	WATER-GAS
QUANTITY PER BOX	1

NOTE:

DIMENSIONS AND WEIGHT

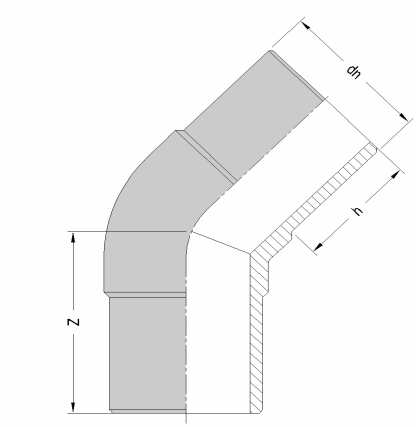

dn	[mm]	160
h	[mm]	100
Z	[mm]	142

WEIGHT	[g]	1365

Tolerance: +/- 5% excluding dn

MARKING AND LABEL on fitting

PE100 d160 PN10 SDR17

STANDARDS AND APPROVALS

EN 12201
EN 1555
ISO 15494
DVGW

INFOS

- Moulded in PE 100 with long collar

All dimensions are in millimeters and are intended as nominal and standard sizes: weights are in grams.
EUROSTANDARD reserves the right to change geometries and dimensions of any product.

TECHNICAL DATASHEET

45° elbow

PN10 **SDR17**

PRODUCT DETAILS

DIMENSIONS AND WEIGHT

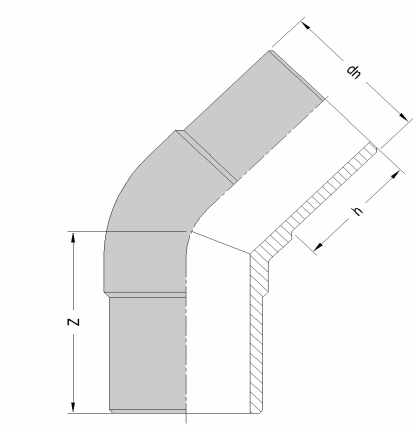

ITEM	**2015100180**
dn [mm]	180
dn1 [mm]	
SDR	17
PN	10
MATERIAL	PE100
TRADEMARK	EURO
MANUFACTURING TYPE	INJECTION MOULDED
USE	WATER-GAS
QUANTITY PER BOX	1

NOTE:

dn	[mm]	180
h	[mm]	125
Z	[mm]	183

WEIGHT	[g]	2300

Tolerance: +/- 5% excluding dn

MARKING AND LABEL on fitting

PE100 d180 PN10 SDR17

STANDARDS AND APPROVALS

EN 12201
EN 1555
ISO 15494
DVGW

INFOS

- Moulded in PE 100 with long collar

All dimensions are in millimeters and are intended as nominal and standard sizes: weights are in grams.
EUROSTANDARD reserves the right to change geometries and dimensions of any product.

TECHNICAL DATASHEET

45° elbow

PN10 **SDR17**

PRODUCT DETAILS

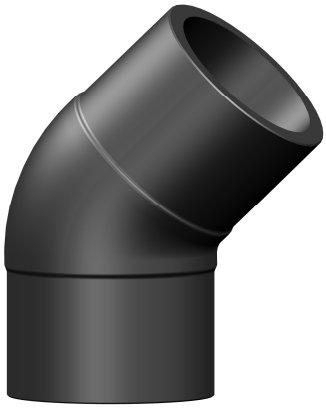

DIMENSIONS AND WEIGHT

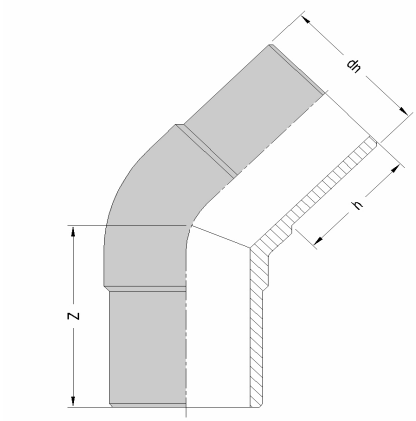

ITEM	**2015100200**
dn [mm]	200
dn1 [mm]	
SDR	17
PN	10
MATERIAL	PE100
TRADEMARK	EURO
MANUFACTURING TYPE	INJECTION MOULDED
USE	WATER-GAS
QUANTITY PER BOX	1

NOTE:

dn	[mm]	200
h	[mm]	131
Z	[mm]	197

WEIGHT	[g]	3150

Tolerance: +/- 5% excluding dn

MARKING AND LABEL on fitting

PE100 d200 SDR17 PN10

STANDARDS AND APPROVALS

EN 12201
EN 1555
ISO 15494
DVGW

INFOS

- Moulded in PE 100 with long collar

All dimensions are in millimeters and are intended as nominal and standard sizes: weights are in grams.
EUROSTANDARD reserves the right to change geometries and dimensions of any product.

TECHNICAL DATASHEET

45° elbow

PN10 **SDR17**

PRODUCT DETAILS

DIMENSIONS AND WEIGHT

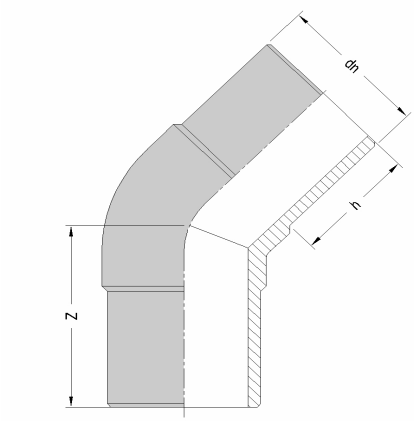

ITEM	**2015100225**
dn [mm]	225
dn1 [mm]	
SDR	17
PN	10
MATERIAL	PE100
TRADEMARK	EURO
MANUFACTURING TYPE	INJECTION MOULDED
USE	WATER-GAS
QUANTITY PER BOX	1

NOTE:

dn	[mm]	225
h	[mm]	134
Z	[mm]	213

WEIGHT	[g]	4360

Tolerance: +/- 5% excluding dn

MARKING AND LABEL on fitting

PE100 d225 PN10 SDR17

STANDARDS AND APPROVALS

EN 12201
EN 1555
ISO 15494
DVGW

INFOS

- Moulded in PE 100 with long collar

All dimensions are in millimeters and are intended as nominal and standard sizes: weights are in grams.
EUROSTANDARD reserves the right to change geometries and dimensions of any product.

TECHNICAL DATASHEET

45° elbow

PN10 **SDR17**

PRODUCT DETAILS

DIMENSIONS AND WEIGHT

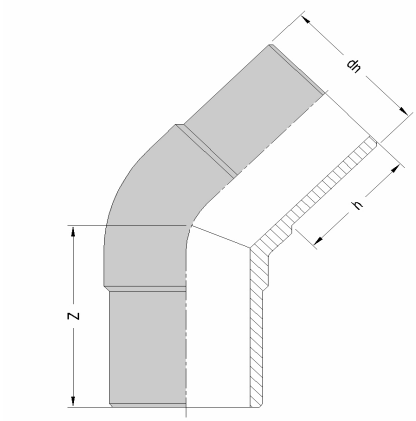

ITEM	**2015100250**
dn [mm]	250
dn1 [mm]	
SDR	17
PN	10
MATERIAL	PE100
TRADEMARK	EURO
MANUFACTURING TYPE	INJECTION MOULDED
USE	WATER-GAS
QUANTITY PER BOX	1

NOTE:

dn	[mm]	250
h	[mm]	142
Z	[mm]	232

WEIGHT	[g]	5750

Tolerance: +/- 5% excluding dn

MARKING AND LABEL on fitting

PE100 d250 PN10 SDR17

STANDARDS AND APPROVALS

EN 12201
EN 1555
ISO 15494
DVGW

INFOS

- Moulded in PE 100 with long collar

All dimensions are in millimeters and are intended as nominal and standard sizes: weights are in grams.
EUROSTANDARD reserves the right to change geometries and dimensions of any product.

TECHNICAL DATASHEET

45° elbow

PN10 **SDR17**

PRODUCT DETAILS

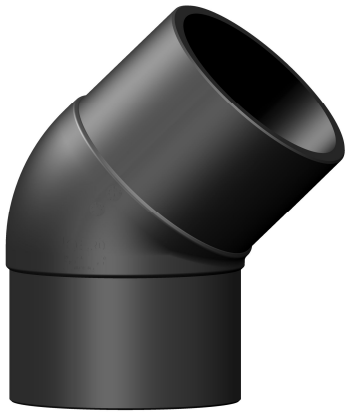

ITEM	**2015100280**
dn [mm]	280
dn1 [mm]	
SDR	17
PN	10
MATERIAL	PE100
TRADEMARK	EURO
MANUFACTURING TYPE	INJECTION MOULDED
USE	WATER-GAS
QUANTITY PER BOX	1

NOTE:

DIMENSIONS AND WEIGHT

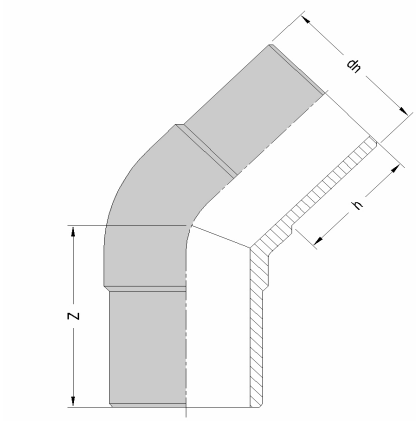

dn	[mm]	280
h	[mm]	171
Z	[mm]	245

WEIGHT	[g]	7330

Tolerance: +/- 5% excluding dn

MARKING AND LABEL on fitting

PE100 d280 PN10 SDR17

STANDARDS AND APPROVALS

EN 12201
EN 1555
ISO 15494
DVGW

INFOS

- Moulded in PE 100 with long collar

All dimensions are in millimeters and are intended as nominal and standard sizes: weights are in grams.
EUROSTANDARD reserves the right to change geometries and dimensions of any product.

TECHNICAL DATASHEET

45° elbow

PN10 **SDR17**

PRODUCT DETAILS

ITEM	**2015100315**
dn [mm]	315
dn1 [mm]	
SDR	17
PN	10
MATERIAL	PE100
TRADEMARK	EURO
MANUFACTURING TYPE	INJECTION MOULDED
USE	WATER-GAS
QUANTITY PER BOX	1

NOTE:

DIMENSIONS AND WEIGHT

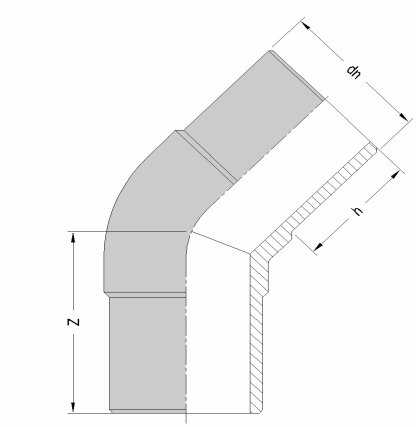

dn	[mm]	315
h	[mm]	210
Z	[mm]	318

WEIGHT	[g]	11980

Tolerance: +/- 5% excluding dn

MARKING AND LABEL on fitting

PE100 d315 SDR17 PN10

STANDARDS AND APPROVALS

EN 12201
EN 1555
ISO 15494
DVGW

INFOS

- Moulded in PE 100 with long collar

All dimensions are in millimeters and are intended as nominal and standard sizes: weights are in grams.
EUROSTANDARD reserves the right to change geometries and dimensions of any product.