TECHNICAL DATASHEET

cap

PN10 **SDR17**

PRODUCT DETAILS

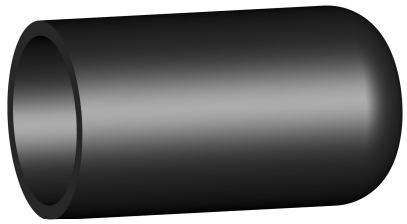

DIMENSIONS AND WEIGHT

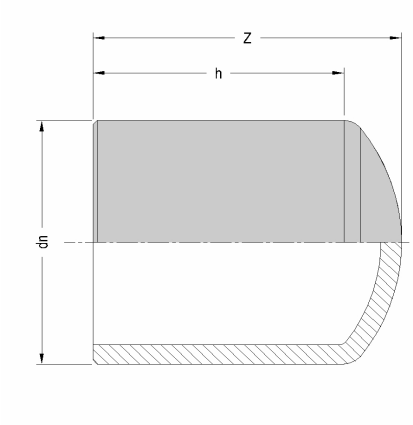

ITEM	**2035100040**
dn [mm]	40
dn1 [mm]	
SDR	17
PN	10
MATERIAL	PE100
TRADEMARK	EURO
MANUFACTURING TYPE	INJECTION MOULDED
USE	WATER-GAS
QUANTITY PER BOX	30

NOTE:

dn	[mm]	40
h	[mm]	57
Z	[mm]	68

WEIGHT	[g]	31

Tolerance: +/- 5% excluding dn

MARKING AND LABEL on fitting

PE100 d40 PN10 / SDR17

STANDARDS AND APPROVALS

EN 12201
EN 1555
ISO 15494
DVGW

INFOS

- Moulded in PE 100 with long collar
- Buttfusion unadvised

All dimensions are in millimeters and are intended as nominal and standard sizes: weights are in grams.
EUROSTANDARD reserves the right to change geometries and dimensions of any product.

TECHNICAL DATASHEET

cap

PN10 **SDR17**

PRODUCT DETAILS

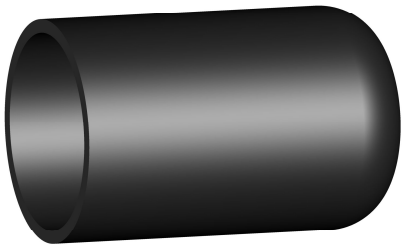

DIMENSIONS AND WEIGHT

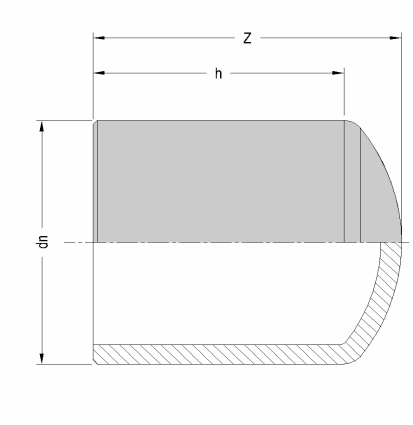

ITEM	**2035100050**
dn [mm]	50
dn1 [mm]	
SDR	17
PN	10
MATERIAL	PE100
TRADEMARK	EURO
MANUFACTURING TYPE	INJECTION MOULDED
USE	WATER-GAS
QUANTITY PER BOX	15

NOTE:

dn	[mm]	50
h	[mm]	61
Z	[mm]	74

WEIGHT	[g]	37

Tolerance: +/- 5% excluding dn

MARKING AND LABEL on fitting

PE100 d50 PN10 SDR17

STANDARDS AND APPROVALS

EN 12201
EN 1555
ISO 15494
DVGW

INFOS

- Moulded in PE 100 with long collar
- Buttfusion unadvised

All dimensions are in millimeters and are intended as nominal and standard sizes: weights are in grams.
EUROSTANDARD reserves the right to change geometries and dimensions of any product.

TECHNICAL DATASHEET

cap

PN10 **SDR17**

PRODUCT DETAILS

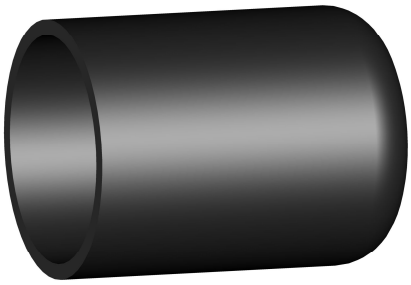

DIMENSIONS AND WEIGHT

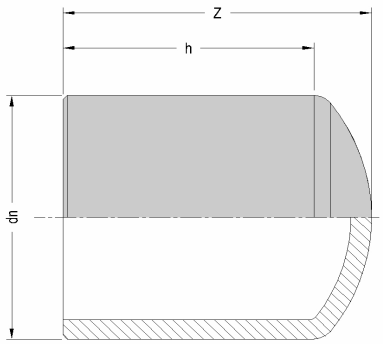

ITEM	**2035100063**
dn [mm]	63
dn1 [mm]	
SDR	17
PN	10
MATERIAL	PE100
TRADEMARK	EURO
MANUFACTURING TYPE	INJECTION MOULDED
USE	WATER-GAS
QUANTITY PER BOX	12

NOTE:

dn	[mm]	63
h	[mm]	64
Z	[mm]	80

WEIGHT	[g]	65

Tolerance: +/- 5% excluding dn

MARKING AND LABEL on fitting

PE100 d63 PN10 SDR17

STANDARDS AND APPROVALS

EN 12201
EN 1555
ISO 15494
DVGW

INFOS

- Moulded in PE 100 with long collar

All dimensions are in millimeters and are intended as nominal and standard sizes: weights are in grams.
EUROSTANDARD reserves the right to change geometries and dimensions of any product.

TECHNICAL DATASHEET

cap

PN10 **SDR17**

PRODUCT DETAILS

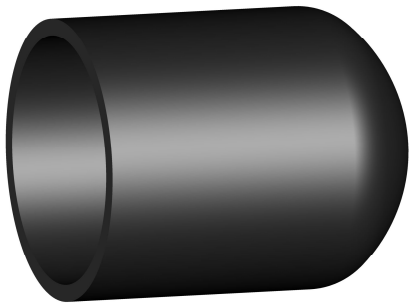

DIMENSIONS AND WEIGHT

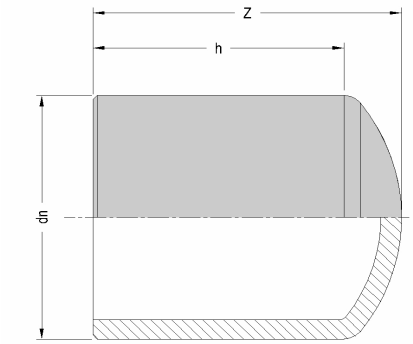

ITEM	**2035100075**
dn [mm]	75
dn1 [mm]	
SDR	17
PN	10
MATERIAL	PE100
TRADEMARK	EURO
MANUFACTURING TYPE	INJECTION MOULDED
USE	WATER-GAS
QUANTITY PER BOX	5

NOTE:

dn	[mm]	75
h	[mm]	74
Z	[mm]	89

WEIGHT	[g]	100

Tolerance: +/- 5% excluding dn

MARKING AND LABEL on fitting

PE100 d75 SDR17 PN10

STANDARDS AND APPROVALS

EN 12201
EN 1555
ISO 15494
DVGW

INFOS

- Moulded in PE 100 with long collar

All dimensions are in millimeters and are intended as nominal and standard sizes: weights are in grams.
EUROSTANDARD reserves the right to change geometries and dimensions of any product.

TECHNICAL DATASHEET

cap

PN10 **SDR17**

PRODUCT DETAILS

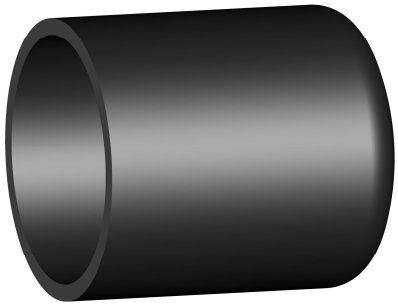

DIMENSIONS AND WEIGHT

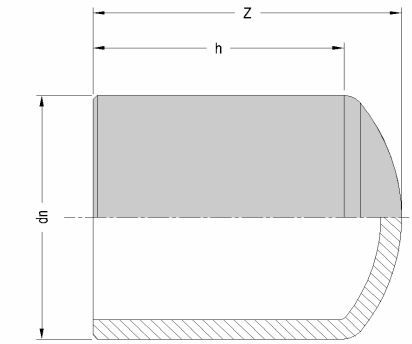

ITEM	**2035100090**
dn [mm]	90
dn1 [mm]	
SDR	17
PN	10
MATERIAL	PE100
TRADEMARK	EURO
MANUFACTURING TYPE	INJECTION MOULDED
USE	WATER-GAS
QUANTITY PER BOX	6

NOTE:

dn	[mm]	90
h	[mm]	82
Z	[mm]	100

WEIGHT	[g]	165

Tolerance: +/- 5% excluding dn

MARKING AND LABEL on fitting

PE100 d90 SDR17 PN10

STANDARDS AND APPROVALS

EN 12201
EN 1555
ISO 15494
DVGW

INFOS

- Moulded in PE 100 with long collar

All dimensions are in millimeters and are intended as nominal and standard sizes: weights are in grams.
EUROSTANDARD reserves the right to change geometries and dimensions of any product.

TECHNICAL DATASHEET

cap

PN10 **SDR17**

PRODUCT DETAILS

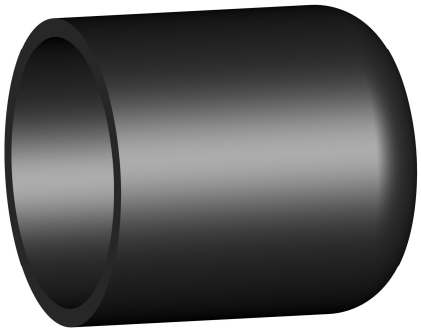

ITEM	**2035100110**
dn [mm]	110
dn1 [mm]	
SDR	17
PN	10
MATERIAL	PE100
TRADEMARK	EURO
MANUFACTURING TYPE	INJECTION MOULDED
USE	WATER-GAS
QUANTITY PER BOX	9

NOTE:

DIMENSIONS AND WEIGHT

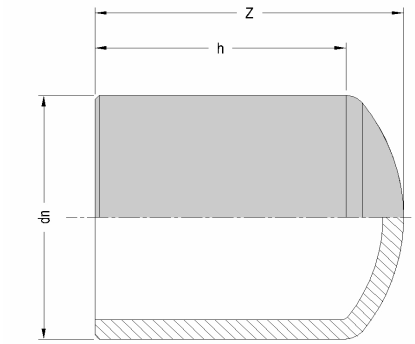

dn	[mm]	110
h	[mm]	91
Z	[mm]	118

WEIGHT	[g]	270

Tolerance: +/- 5% excluding dn

MARKING AND LABEL on fitting

PE100 d110 PN10 SDR17

STANDARDS AND APPROVALS

EN 12201
EN 1555
ISO 15494
DVGW

INFOS

- Moulded in PE 100 with long collar

All dimensions are in millimeters and are intended as nominal and standard sizes: weights are in grams.
EUROSTANDARD reserves the right to change geometries and dimensions of any product.

TECHNICAL DATASHEET

cap

PN10 **SDR17**

PRODUCT DETAILS

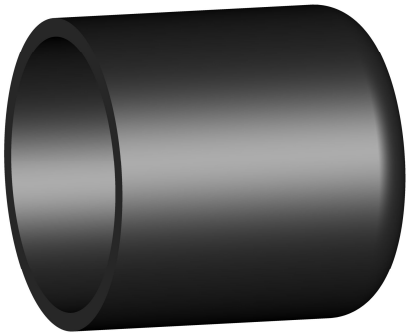

DIMENSIONS AND WEIGHT

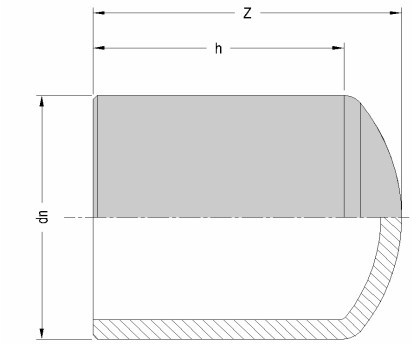

ITEM	**2035100125**
dn [mm]	125
dn1 [mm]	
SDR	17
PN	10
MATERIAL	PE100
TRADEMARK	EURO
MANUFACTURING TYPE	INJECTION MOULDED
USE	WATER-GAS
QUANTITY PER BOX	1

NOTE:

dn	[mm]	125
h	[mm]	102
Z	[mm]	122

WEIGHT	[g]	350

Tolerance: +/- 5% excluding dn

MARKING AND LABEL on fitting

PE100 d125 SDR17 PN10

STANDARDS AND APPROVALS

EN 12201
EN 1555
ISO 15494
DVGW

INFOS

- Moulded in PE 100 with long collar

All dimensions are in millimeters and are intended as nominal and standard sizes: weights are in grams.
EUROSTANDARD reserves the right to change geometries and dimensions of any product.

TECHNICAL DATASHEET

cap

PN10 **SDR17**

PRODUCT DETAILS

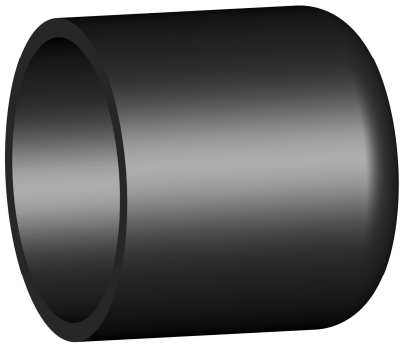

DIMENSIONS AND WEIGHT

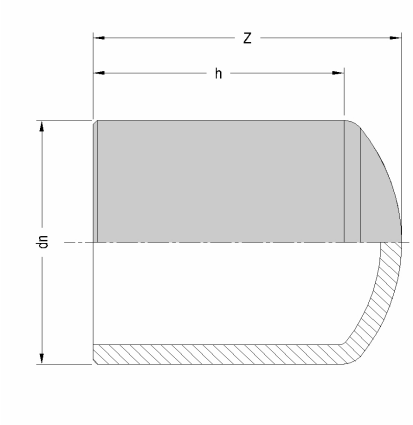

ITEM	**2035100140**
dn [mm]	140
dn1 [mm]	
SDR	17
PN	10
MATERIAL	PE100
TRADEMARK	EURO
MANUFACTURING TYPE	INJECTION MOULDED
USE	WATER-GAS
QUANTITY PER BOX	1

NOTE:

dn	[mm]	140
h	[mm]	103
Z	[mm]	125

WEIGHT	[g]	450

Tolerance: +/- 5% excluding dn

MARKING AND LABEL on fitting

PE100 d140 SDR17 PN10

STANDARDS AND APPROVALS

EN 12201
EN 1555
ISO 15494
DVGW

INFOS

- Moulded in PE 100 with long collar

All dimensions are in millimeters and are intended as nominal and standard sizes: weights are in grams.
EUROSTANDARD reserves the right to change geometries and dimensions of any product.

TECHNICAL DATASHEET

cap

PN10 **SDR17**

PRODUCT DETAILS

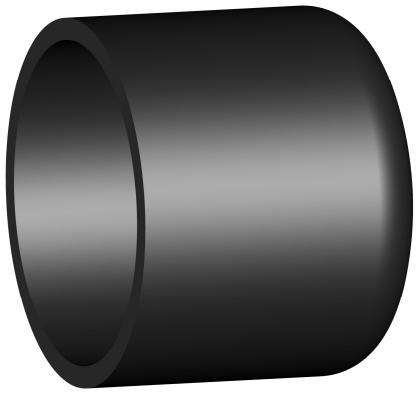

DIMENSIONS AND WEIGHT

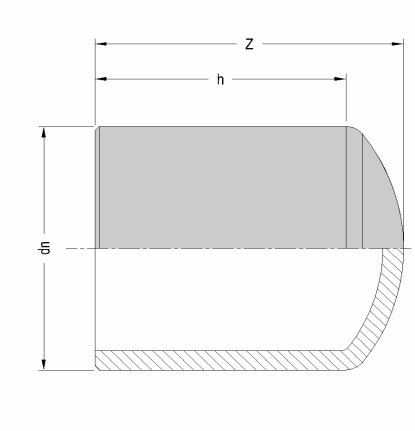

ITEM	**2035100160**
dn [mm]	160
dn1 [mm]	
SDR	17
PN	10
MATERIAL	PE100
TRADEMARK	EURO
MANUFACTURING TYPE	INJECTION MOULDED
USE	WATER-GAS
QUANTITY PER BOX	1

NOTE:

dn	[mm]	160
h	[mm]	101
Z	[mm]	134

WEIGHT	[g]	665

Tolerance: +/- 5% excluding dn

MARKING AND LABEL on fitting

PE100 d160 PN10 SDR17

STANDARDS AND APPROVALS

EN 12201
EN 1555
ISO 15494
DVGW

INFOS

- Moulded in PE 100 with long collar

All dimensions are in millimeters and are intended as nominal and standard sizes: weights are in grams.
EUROSTANDARD reserves the right to change geometries and dimensions of any product.

TECHNICAL DATASHEET

cap

PN10 **SDR17**

PRODUCT DETAILS

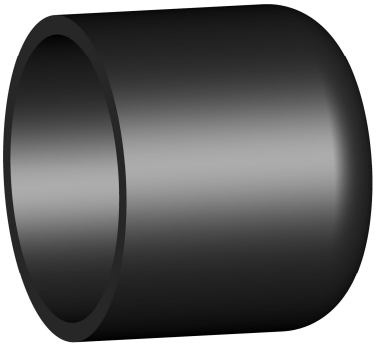

DIMENSIONS AND WEIGHT

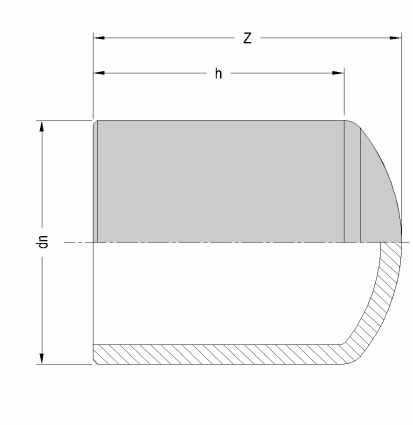

ITEM	**2035100180**
dn [mm]	180
dn1 [mm]	
SDR	17
PN	10
MATERIAL	PE100
TRADEMARK	EURO
MANUFACTURING TYPE	INJECTION MOULDED
USE	WATER-GAS
QUANTITY PER BOX	1

NOTE:

dn	[mm]	180
h	[mm]	114
Z	[mm]	150

WEIGHT	[g]	970

Tolerance: +/- 5% excluding dn

MARKING AND LABEL on fitting

PE100 d180 SDR17 PN10

STANDARDS AND APPROVALS

EN 12201
EN 1555
ISO 15494
DVGW

INFOS

- Moulded in PE 100 with long collar

All dimensions are in millimeters and are intended as nominal and standard sizes: weights are in grams.
EUROSTANDARD reserves the right to change geometries and dimensions of any product.

TECHNICAL DATASHEET

cap

PN10 **SDR17**

PRODUCT DETAILS

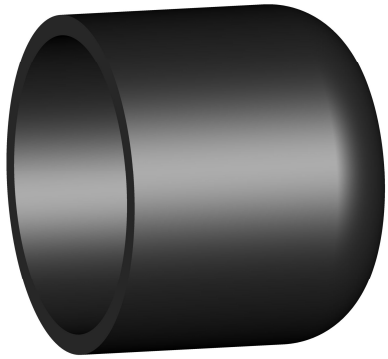

DIMENSIONS AND WEIGHT

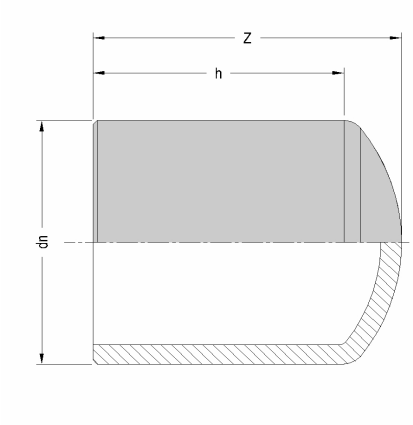

ITEM	**2035100200**
dn [mm]	200
dn1 [mm]	
SDR	17
PN	10
MATERIAL	PE100
TRADEMARK	EURO
MANUFACTURING TYPE	INJECTION MOULDED
USE	WATER-GAS
QUANTITY PER BOX	1

NOTE:

dn	[mm]	200
h	[mm]	119
Z	[mm]	163

WEIGHT	[g]	1310

Tolerance: +/- 5% excluding dn

MARKING AND LABEL on fitting

PE100 d200 PN10 SDR17

STANDARDS AND APPROVALS

EN 12201
EN 1555
ISO 15494
DVGW

INFOS

- Moulded in PE 100 with long collar

All dimensions are in millimeters and are intended as nominal and standard sizes: weights are in grams.
EUROSTANDARD reserves the right to change geometries and dimensions of any product.

TECHNICAL DATASHEET

cap

PN10 **SDR17**

PRODUCT DETAILS

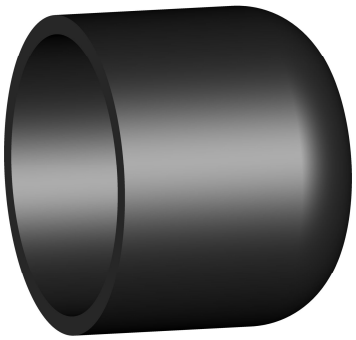

ITEM	**2035100225**
dn [mm]	225
dn1 [mm]	
SDR	17
PN	10
MATERIAL	PE100
TRADEMARK	EURO
MANUFACTURING TYPE	INJECTION MOULDED
USE	WATER-GAS
QUANTITY PER BOX	1

NOTE:

DIMENSIONS AND WEIGHT

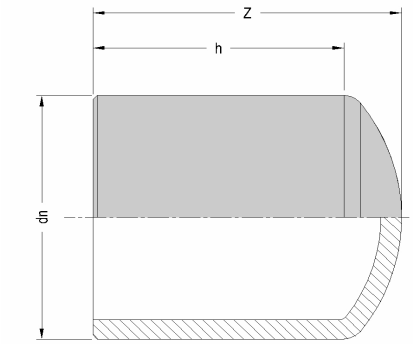

dn	[mm]	225
h	[mm]	124
Z	[mm]	180

WEIGHT	[g]	1750

Tolerance: +/- 5% excluding dn

MARKING AND LABEL on fitting

PE100 d225 SDR17 PN10

STANDARDS AND APPROVALS

EN 12201
EN 1555
ISO 15494
DVGW

INFOS

- Moulded in PE 100 with long collar

All dimensions are in millimeters and are intended as nominal and standard sizes: weights are in grams.
EUROSTANDARD reserves the right to change geometries and dimensions of any product.

TECHNICAL DATASHEET

cap

PN10 **SDR17**

PRODUCT DETAILS

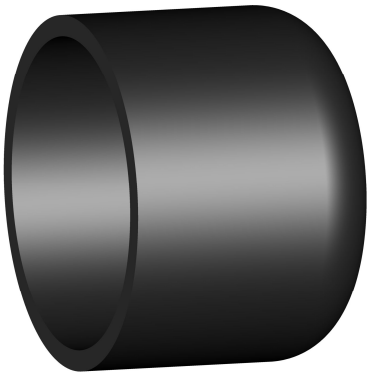

DIMENSIONS AND WEIGHT

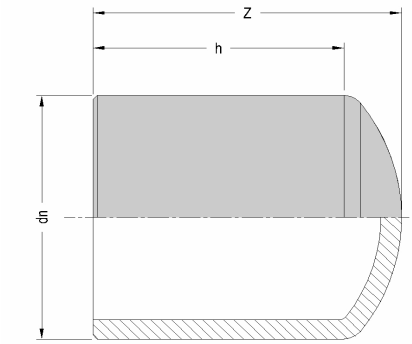

ITEM	**2035100250**
dn [mm]	250
dn1 [mm]	
SDR	17
PN	10
MATERIAL	PE100
TRADEMARK	EURO
MANUFACTURING TYPE	INJECTION MOULDED
USE	WATER-GAS
QUANTITY PER BOX	1

NOTE:

dn	[mm]	250
h	[mm]	132
Z	[mm]	179

WEIGHT	[g]	2275

Tolerance: +/- 5% excluding dn

MARKING AND LABEL on fitting

PE100 d250 PN10 SDR17

STANDARDS AND APPROVALS

EN 12201
EN 1555
ISO 15494
DVGW

INFOS

- Moulded in PE 100 with long collar

All dimensions are in millimeters and are intended as nominal and standard sizes: weights are in grams.
EUROSTANDARD reserves the right to change geometries and dimensions of any product.

TECHNICAL DATASHEET

cap

PN10 **SDR17**

PRODUCT DETAILS

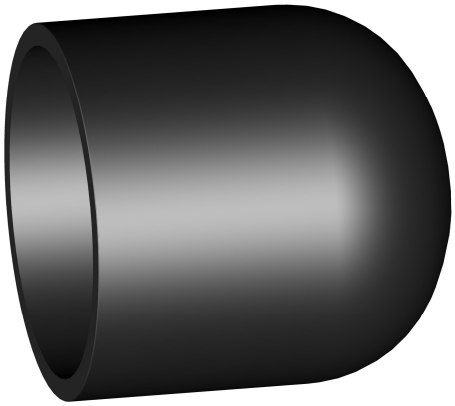

ITEM	**2035100280**
dn [mm]	280
dn1 [mm]	
SDR	17
PN	10
MATERIAL	PE100
TRADEMARK	EURO
MANUFACTURING TYPE	INJECTION MOULDED
USE	WATER-GAS
QUANTITY PER BOX	1

NOTE:

DIMENSIONS AND WEIGHT

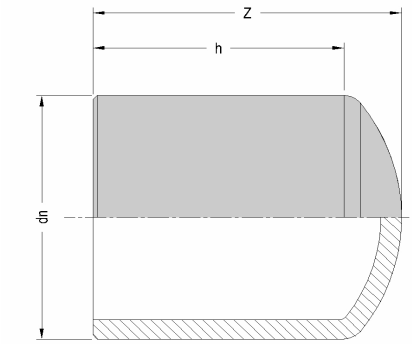

dn	[mm]	280
h	[mm]	170
Z	[mm]	278

WEIGHT	[g]	3870

Tolerance: +/- 5% excluding dn

MARKING AND LABEL on fitting

PE100 d280 PN10 SDR17

STANDARDS AND APPROVALS

EN 12201
EN 1555
ISO 15494
DVGW

INFOS

- Moulded in PE 100 with long collar

All dimensions are in millimeters and are intended as nominal and standard sizes: weights are in grams.
EUROSTANDARD reserves the right to change geometries and dimensions of any product.

TECHNICAL DATASHEET

cap

PN10 **SDR17**

PRODUCT DETAILS

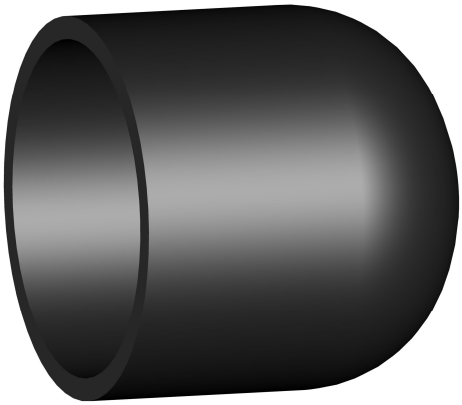

DIMENSIONS AND WEIGHT

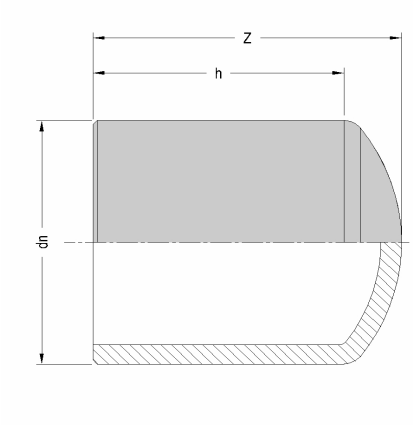

ITEM	**2035100315**
dn [mm]	315
dn1 [mm]	
SDR	17
PN	10
MATERIAL	PE100
TRADEMARK	EURO
MANUFACTURING TYPE	INJECTION MOULDED
USE	WATER-GAS
QUANTITY PER BOX	1

NOTE:

dn	[mm]	315
h	[mm]	175
Z	[mm]	298

WEIGHT	[g]	5100

Tolerance: +/- 5% excluding dn

MARKING AND LABEL on fitting

PE100 d315 SDR17 PN10

STANDARDS AND APPROVALS

EN 12201
EN 1555
ISO 15494
DVGW

INFOS

- Moulded in PE 100 with long collar

All dimensions are in millimeters and are intended as nominal and standard sizes: weights are in grams.
EUROSTANDARD reserves the right to change geometries and dimensions of any product.